AIM INDUSTRIES

MANUFACTURERS OF ELECTRICALLY CROSS - WELDED WIRE MESH

AIM INDUSTRIES

Manufacturer of Wire Mesh

AIM INDUSTRIES

MANUFACTURERS OF
ELECTRICALLY CROSS - WELDED WIRE MESH

We manufacture Welded Wire Mesh on an imported Wire Mesh welding plant. Our Welding plant has been imported from Austria, manufactured by **M/s EVG,** a world-renowned company whose machines are considered one of the best Machines for Manufacturing Welded Wire Mesh.
The Line Wires are pulled from the coils and cross wires are straightened on Wire Straightening Machines.

We have an in house wire Drawing Facility to draw Wires from 10 mm to 3 mm, On the world's famous wire Drawing Machine Manufacturer, **M/s Hi Draw Engineering ltd.,** England UK. Wire drawn is used for Manufacturing Welded Wire Mesh.

WELDED MESH

Welded mesh is a welded steel wire mesh manufactured from Bright drawn wire, electrically welded at the intersections. Because it is welded it can be cut or bent to the shape Required without the wires falling apart and forms its own Selvage when cut flush. Welded mesh is made in rolls and Sheets in gauges as light as 2.6mm up to 7mm diameter and in Meshes from 50mm x 50mm. The physical properties of The wires used are rigidly controlled to produce a welded Mesh which has maximum weld, strength combined with Ductility. The steel specification allows for bright drawn Wire having a tensile strength of 460-620N/mm^2 with a High resistance to fatigue.

Cut to the shape you want it holds together because it is welded together and needs no frame.

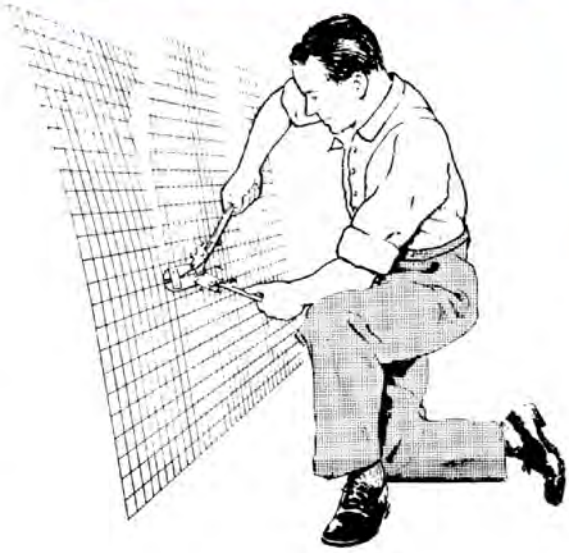

WELDS

All intersections are resistance welded and without reducing The tensile strength of the wires the welds have an average Shear strength equal to 80 percent of the wire strength.

GENERAL USES

Welded mesh has an infinite number of uses, some of the most general applications being: Partitions and enclosures, machinery and window guards, ventilator guards, tree guards, shelving, Racking and grills, safety barriers, security cages, fireguards and fan guards, fencing and gates, Stairways, balustrading and catwalks, agricultural and horticultural applications, poultry pens, Animal pens, cages and aviaries, gabions for river and coastal protection, crates for packing and Materials handling, pallets, trays for stillages for factory and industrial applications, cable trays, skip and roof bolting and wall lagging, shaft linings, bulkheads and cargo cages, anti-Spalling material and mesh for boiler linings, garden protection, display work, litter bins, clothes And storage lockers, etc. Welded mesh for all general wire-work purposes.

HOW TO ORDER

It is important, when ordering, to state clearly a full Specification, preferably in the following order

- 1. Welded mesh reference Number.
- 2. Size of mesh.
- 3. Gauge of wire.
- 4. Width and length of sheet or roll.

REGULAR CENTRES

- 5. Cut flush or with overhangs.
- 6. State type of finish required.

Tree Guard

USAGE OF WELDED WIRE MESH

Construction

Security Fencing

Gabions

Machine Guard

SECTION 1- Standard Metric Welded Wire

MESH DESCRIPTION

Welded wire mesh is an oblong or square mesh of steel wire in sheets or rolls.

It complies with British Standard 4483: 1969 Steel Welded Wire Mesh for the Reinforcement of Concrete.

The main wires of the wire mesh are held rigidly at the correct spacing by cross wires electrically welded to them.

STANDARD SIZES

The lengths and widths given in the tables are standard sizes that are normally held in stock. Special lengths or widths can be made to order, but standard sizes are more Quickly obtainable.

In square fabric the cross wires project 50mm. beyond each outside wire, and in Structural, Long and Wrapping they Project 50mm. The width for which we charge is the distance from tip to tip of the cross wire and longitudinal wire.

ADVANTAGES

It is safer to allow a working stress in wire meshup to 230 N/mm• than to allow 140N/mm• in rolled mild steel rods because.

(a) Hard drawn steel wire to British Standard 4482 has a minimum breaking strength of 570N/mm• and a minimum yield point of 485N/mm• whereas that for rolled mild steel is only 248N/mm• The yield point is more important than the ultimate breaking strength. As mild steel is permanently deformed if stressed beyond the yield point. The factor of safety calculated on the yield point is 2.12 for welded wire mesh and only 1.8 for mild steel.

(B) Hard Drawn steel wire is perfectly regular in cross section, whereas rolled mild steel rods of smaller diameter frequently vary up to 10 percent. In addition to being regular in cross section, Drawn wire is the same Quality and strength from skin to core.
Welded wire mesh as a reinforcement is equivalent to rolled mild steel rods weighing at least 60 percent more.
Welded wire mesh is supplied in sheets or rolls, one roll being equivalent to over 260 loose rods that have to be Welded together at the site.
With Welded wire mesh there are no small pieces that can be lost.
Welded wire mesh is simple to lay and once in position is not readily displaced by workmen when laying the concrete as is often the case where bars are used.

PRINCIPAL APPLICATIONS

Welded wire mesh is mainly employed for reinforcement where an area of concrete is laid such as floors, roofs foundations and roads.

USEFUL CONVERSION FACTORS

Length	**1 metre = 1.09 Yards = 3.28 Feet** **1mm = 0.03937 inches**	
Weight	**1 kg = 2.20462lb.** **1 metric tonne = 0.9842 ton**	
Area	**1 sq. metre = 10.764 sq.ft.**	
Force	**1 Newton(N) = 0.225 lbf.**	
Pressure or stress	**Newtons (N) per mm• = 145.04 lb/in.**	**0.0068948 N/mm• = 1 lb/in•** **6.894N/mm• 1000 1 lb/in•** **227 N/mm• 33,000 1 lb/in•**
Moment/Width	**2.65 Newton metres/meter =/lb/in/ft.**	**1 N m/m 0.377 ib/in/ft.width**

STANDARD METRIC SIZES

Specifications

	B.S. 4483 Ref.	Mesh sizes nominal pitch of wires		Diameter of wire		Cross Sectional area per metre width		Safe Tensile strength in N at	Nominal Mass per square metre
		Main mm.	Cross mm.	Main mm.	Cross mm.	Main mm.•	Cross mm.•	230N/mm per Metre Width	kg.
SQUARE	A393	200	200	10	10	393	393	90275	6.16
	A252	200	200	8	8	252	252	57845	3.95
	A193	200	200	7	7	193	193	44275	3.02
	A142	200	200	6	6	142	142	32545	2.22
	A98	200	200	5	5	98	98	22586	1.54
STRUCTURAL	B1131	100	200	12	8	1131	252	260130	10.90
	B785	100	200	10	8	785	252	180550	8.14
	B503	100	200	8	8	503	252	115690	5.93
	B385	100	200	7	7	385	193	88527	4.53
	B283	100	200	6	7	283	193	65090	3.73
	B196	100	200	5	7	196	193	45172	3.05
LONG	C785	100	400	10	6	785	70.8	180550	6.72
	C636	100	400	9	6	636	70.8	146257	5.55
	C503	100	400	8	5	503	49.0	115690	4.34
	C385	100	400	7	5	385	49.0	88527	3.41
	C283	100	400	6	5	283	49.0	65090	2.61
WRAPPING	D98	200	200	5	5	98.0	98.0		1.54
	D83	100	100	3.25	3.25	83.0	83.0		1.302

IMPERIAL EQUIVALENTS

	Mesh sizes nominal pitch of wires		Diameter of wire		Cross Sectional area per foot width		Safe Tensile strength in lb/in. per ft. width.	Weight per square yard
	Main in.	Cross in.	Main in.	Cross in.	Main in.•	Cross in.•		lb.
SQUARE	7.87	7.87	0.39	0.39	0.185	0.185	6105	11.35
	7.87	7.87	0.31	0.31	0.119	0.119	3927	7.28
	7.87	7.87	0.28	0.28	0.091	0.091	3003	5.57
	7.87	7.87	0.24	0.24	0.067	0.067	2211	4.09
	7.87	7.87	0.20	0.20	0.046	0.46	1518	2.84
STRUCTURAL	3.94	7.87	0.47	0.31	0.534	0.119	17787	20.01
	3.94	7.87	0.39	0.31	0.371	0.119	12243	15.00
	3.94	7.87	0.31	0.31	0.238	0.119	7854	10.93
	3.94	7.87	0.28	0.28	0.182	0.091	6006	8.35
	3.94	7.87	0.24	0.28	0.134	0.091	4422	6.88
	3.94	7.87	0.20	0.28	0.093	0.091	3069	5.62
LONG	3.94	15.74	0.39	0.24	0.371	0.033	12243	12.39
	3.94	15.74	0.35	0.24	0.300	0.033	9900	10.23
	3.94	15.74	0.31	0.20	0.238	0.023	7854	7.96
	3.94	15.74	0.28	0.20	0.182	0.023	6006	6.29
	3.94	15.74	0.24	0.20	0.134	0.023	4422	4.81
WRAPPING	7.87	7.87	0.20	0.20	0.046	0.046		2.84
	3.94	3.94	0.13	0.13	0.040	0.040		2.39

WELDED MESH_FULL SIZE SECTIONS OF WIRE

Diam (mm.)	12	10	9	8	7	6	5	3.25
Diam (ins.)	0.47	0.39	0.35	0.31	0.28	0.24	0.20	0.128
Area (mm.)	113.097	78.540	63.617	50.265	38.484	28.274	19.635	8.301
Area(in.)	0.175	0.122	0.099	0.078	0.060	0.044	0.030	0.0128

STANDARD SHEETS (4.8m. x 2.4m.)

Sizes and Shipping Dimensions

	B.S. 4483 Ref.	Length of standard sheet (m.)	Width of standard sheet (m.)	Approximate dimentions of bundle for shipment				
				Contents of bundle sheets	Length (cm.)	Width (cm.)	Depth (cm.)	Weight (kg.)
SQUARE	A393	4.8	2.4	10	480	240	11.0	709.63
	A252			12			10.4	546.05
	A193			14			10.5	487.07
	A142			16			10.2	409.19
	A98			20			10.5	354.82
STRUCTURAL	B1131	4.8	2.4	8	480	240	9.2	1004.54
	B785			10			10.0	937.73
	B503			12			10.4	819.76
	B385			14			10.5	730.60
	B283			16			11.1	687.51
	B196			16			10.3	562.18
LONG	C785	4.8	2.4	15	480	240	13.0	1161.21
	C636			15			12.1	959.04
	C503			20			13.8	999.93
	C385			30			18.7	1178.49
	C283			30			17.1	902.79
WRAPPING	D98	4.8	2.4	20	480	240	10.5	1354.82
	D83			50			12.7	443.52

NON STANDARD SHEETS

Made to suit Engineers Requirements

Special size sheets of the standard range of Welded wire mesh may be produced to meet requirements by arrangement.

Additionally special Welded wire mesh to comply with individual requirements may be produced by agreement.

Welded wire mesh either standard or special may be formed to required shapes by bending or folding to meet specific needs

CALCULATION FOR WELDED WIRE MESH

Slab Thickness = 4" Equals 101.6 mm
Area of 1 Meter = 101.6 x 1,000
= 101600 sq. mm·

As per CP 110 : 1792 Temperature Steel of High Yield Steel is .12%.

Temperature Steel =.0012 x 101600
= 121.92 sq.mm·/M.Length
Dia of Wire = 5mm

Area of Wire = 19.63

No. of Bar / M. Length = $\frac{121.92}{19.63}$ = 6.21

Spacing $\frac{1000}{6.21}$ = 161 mm

Say = 150 mm

Suggest = 150 mm x 150 mm Mesh

Welded wire mesh = 5 mm Dia Wire.

FLOOR SLAB TABLES

The table for the main bending reinforcement required in suspended floors are based on the imposed loading given in CP3 chapter V of the Code of Basic Data for the Design of buildings and also the code of practice for the Structural Use of Reinforced Concrete in Building : C.P 114 Tables A Give the thicknesses of concrete and the Welded Wire Mesh required in soild floors to carry the imposed loading for various purposes.

These tables are for continuous spans when adjacent spans do not vary from one another by more than 15 per cent of the longer span.

The concrete should be 1:2:4 by volume gauged in the proportions of 50 kg. Portland Cement 0.07 m• clean well graded sand 0.14m.• clean gravel or crushed stone graded uniformly from 5 mm. to 19mm. with the minimum quantity of water to give a workable mixture.

we recommend that the cement content for this mix should be not less than 300 kg. per cubic metre.

SUSPENDED FLOOR SLABS

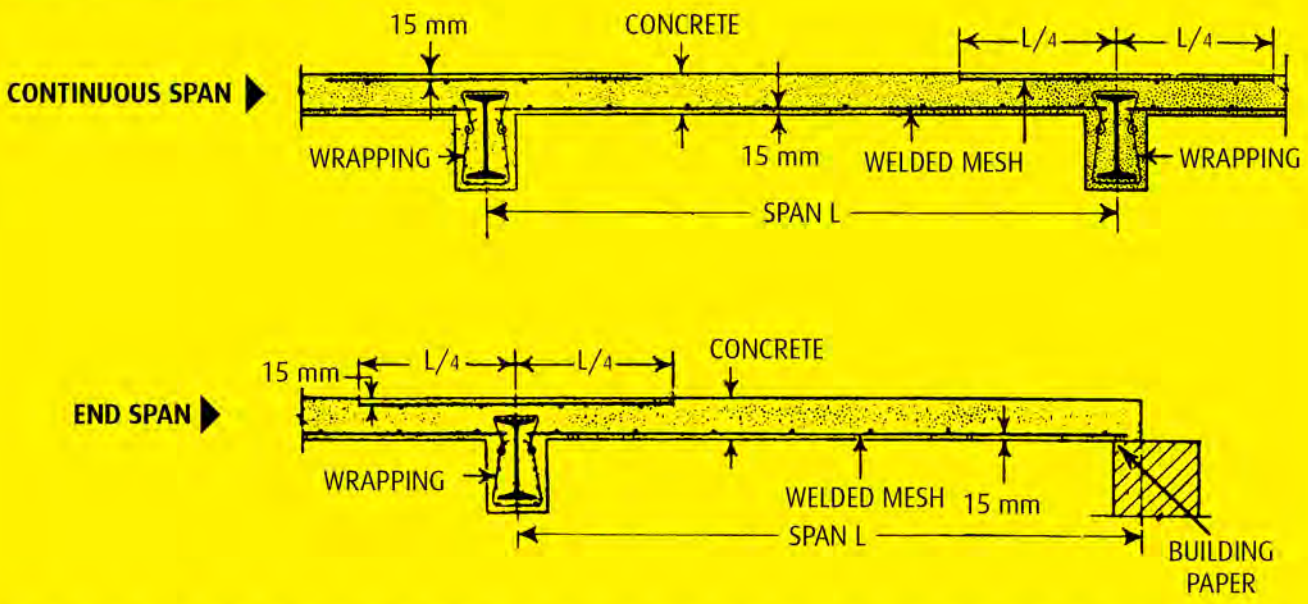

USE OF TABLES (see pages 6-9 Inclusive)

Tables A are for continuous spans. The figures in each table given the Ref No. of BS Standard to be used.
For instance to carry a safe imposed load of 1.5 kN/m• over a span of 3.0m. using concrete 150mm thick with a maximum concrete stress of 7 N/mm• BS 4483 Ref No. B196 may be used if the thickness of concrete is not determined by other considerations it is usually most economical to select the thinnest slab.

End span should, if possible, be made equal to, or less than nine-tenths of the continuous spans for the same size of reinforcement if the ends spans are the same as the others, an extra strip of reinforcement of length equal to two-thirds of the span should be placed in the bottom of the slab and another strip of length equal to one-Quarter of the span should be placed near the top surface symmetrically over the support next to the free end support.

This extra reinforcement need be only about one-quarter the strength of the main-reinforcement through it is often more convenient to make it the same size. A freely supported span may be designed from the tables, by assuming it to be equivalent to a continuous span 25% Greater.

The tables allow in every case for the weight of the floor and finish and also cover the requirements of CP3 Chapter V. It is sometimes necessary to make allowance for partitions and whilst lightweight partitions will be coverd by using a table for a loading 1.0 kN/m• more than the class being considered. Heavier partitions e.g brick will call for special design.

Table B give the resistance moments of slabs in accordance with the load-Factor method of calculation given in CP. 114

The tables are calculated using the permissible working tensile stress in Welded Wire Mesh of 230 N/mm. and two qualities of concrete for which the permissible working compressive stresses are 7N/mm• and 8.5 N/mm• respectively. These table are intended for the use of qualified Structrual engineers who have made their calculations and thickness and Welded Wire Mesh asper BS 4483.

LAYING WELDED WIRE MESH

The sheets of Welded Wire Mesh with the specified cover of concrete should be laid side by side with the main longitudinal wires running in the direction of span of the slab. In order to comply with the requirments of CP 114 clause 311c it is necessary to have a minimum percentage of reinforcement in the direction parallel to the supports. The Welded Wire Mesh have heavier cross wires and providing the area of these wires is at least equal to 0.12% of the gross cross-sectional area of the slab thickness,the sheets may be side lapped 150mm. In the case of "Long Welded Wire Mesh", however the sheets are not side lapped and rods parallel to the cross wires must be included. Rods must also be provided for the Structural Fabrics' if the 0.12% requirement is not met.

FLOORS ON GROUND

It is advisable to reinforce ground slabs with Welded Wire Mesh not only to prevent unsightly cracks arising from contraction of the concrete in setting. But also to assist in carrying the loads over areas in which support from the ground is uncertain.

When ground slabs are required to carry have loading it may be necessary to reinforce top and bottom.
In such cases our engineers will advise on the thickness of concrete and amount of reinforcement.

SUSPENDED FLOOR SLABS

FREELY SUPPORTED SPAN

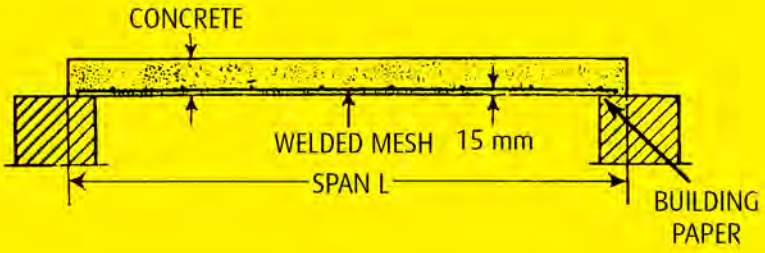

FLOOR ON GROUND

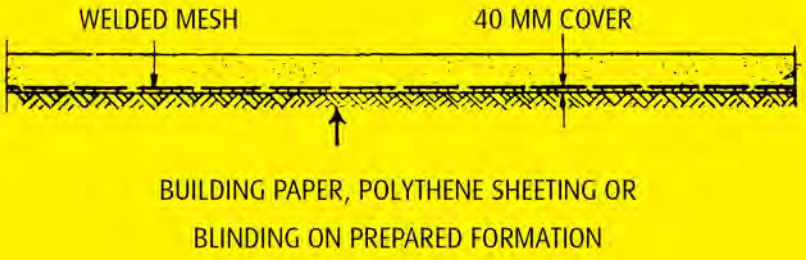

FLOOR SLAB TABLES

Working stresses taken in the preparation of floor slab tables type 'A' are 230 N. per sq. mm. for Welded Wire Mesh and 7 N. per sq. mm. for concrete (For simply supported spans use a continuous span 25 per cent greater) T = 230 N. per sq. mm. P = 7 N. per sq.mm. Cover = 15mm.

RESIDENTIAL BUILDINGS, BEDROOMS IN CLUBS AND HOTELS

Safe imposed load 1-5 kN. Per sq. m. + 1.0 kN. Per sq. m. finishes

SPANS IN METRES

SLAB THICKNESS		2.0 (6.56)	2.5 (8.20)	3.0 (9.84)	3.5 (11.48)	4.0 (13.12)	4.5 (14.76)	5.0 (16.40)	5.5 (18.04)	6.0 (19.69)	6.5 (21.33)	7.0 (22.97)
mm.	in.											
100	3.94	B196	B196	B283								
125	4.92	B196	B196	B196	B283							
150	5.90	B196	B196	B196	B283	B385	B503					
175	6.89	B283	B283	B283	B283	B283	B385	B503	B785	B785		
200	7.87	B283	B283	B283	B283	B283	B385	B503	B503	B785		
225	8.86	B283	B283	B283	B283	B283	B385	B385	B503	B785	B785	B1131
250	9.84	B385	B385	B385	B385	B385	B385	B385	B503	B785	B785	B785
275	10.83	B385	B385	B385	B385	B385	B385	B385	B503	B785	B785	B785
300	11.81	B385	B385	B385	B385	B385	B385	B385	B503	B503	B785	B785

A

(For simply supported spans use a continous span 25 per cent greater) T = 230 N. per sq. mm. P = 7 N. per sq.mm. Cover = 15mm.

CLUBS, COLLEGES, HOSPITALS, HOTELS

Safe imposed load 2.0 kN. Per sq. m. + 1.0 kN. Per sq. m. finishes

SPANS IN METRES

SLAB THICKNESS		2.0 (6.56)	2.5 (8.20)	3.0 (9.84)	3.5 (11.48)	4.0 (13.12)	4.5 (14.76)	5.0 (16.40)	5.5 (18.04)	6.0 (19.69)	6.5 (21.33)	7.0 (22.97)
mm.	in.											
100	3.94	B196	B196	B283								
125	4.92	B196	B196	B196	B385							
150	5.90	B196	B196	B283	B283	B385	B503					
175	6.89	B283	B283	B283	B283	B285	B503	B503	B785			
200	7.87	B283	B283	B283	B283	B283	B385	B503	B785	B785		
225	8.86	B283	B283	B283	B283	B283	B385	B503	B785	B785	B785	B1131
250	9.84	B385	B385	B385	B385	B385	B385	B503	B503	B785	B785	B1131
275	10.83	B385	B385	B385	B385	B385	B385	B385	B503	B785	B785	B785
300	11.81	B385	B385	B385	B385	B385	B385	B385	B503	B785	B785	B785

A

(For simply supported spans use a continous span 25 per cent greater) T = 230 N. per sq. mm. P = 7 N. per sq.mm. Cover = 15mm.

OFFICES, INCLUDING LIGHTWEIGHT PARTITIONS

Safe imposed load 2.5 kN. Per sq. m. + 1.0 kN. Per sq. m. finishes + 1.0 kN. per sq. m. partitions

SPANS IN METRES

SLAB THICKNESS		2.0 (6.56)	2.5 (8.20)	3.0 (9.84)	3.5 (11.48)	4.0 (13.12)	4.5 (14.76)	5.0 (16.40)	5.5 (18.04)	6.0 (19.69)	6.5 (21.33)	7.0 (22.97)
mm.	in.											
100	3.94	B196	B283	B385								
125	4.92	B196	B196	B283	B503							
150	5.90	B196	B196	B283	B385	B385	B503					
175	6.89	B283	B283	B283	B385	B283	B503	B785	B1131			
200	7.87	B283	B283	B283	B283	B283	B385	B785	B785	B1131		
225	8.86	B283	B283	B283	B283	B283	B385	B785	B785	B785	B1131	B1131
250	9.84	B385	B385	B385	B385	B385	B385	B503	B785	B785	B1131	B1131
275	10.83	B385	B385	B385	B385	B385	B385	B503	B785	B785	B1131	B1131
300	11.81	B385	B385	B385	B385	B385	B385	B503	B785	B785	B785	B1131

A

FOR CONTINUOUS SPANS

(For simply supported spans use a continous span 25 per cent greater) T = 230 N. per sq. mm. P = 7 N. per sq.mm. Cover = 15mm.

STUDIOS, READING ROOMS, CAR PARKS

Safe imposed load 2.5 kN. Per sq. m. + 1.0 kN. Per sq. m. finishes

SPANS IN METRES

SLAB THICKNESS		2.0 (6.56)	2.5 (8.20)	3.0 (9.84)	3.5 (11.48)	4.0 (13.12)	4.5 (14.76)	5.0 (16.40)	5.5 (18.04)	6.0 (19.69)	6.5 (21.33)	7.0 (22.97)
mm.	in.											
100	3.94	B196	B196	B283								
125	4.92	B196	B196	B196	B285							
150	5.90	B196	B196	B196	B283	B385	B503					
175	6.89	B283	B283	B283	B283	B285	B503	B785	B785			
200	7.87	B283	B283	B283	B283	B285	B503	B785	B503	B785		
225	8.86	B283	B283	B283	B283	B283	B385	B785	B503	B785	B1131	B1131
250	9.84	B385	B385	B385	B385	B385	B385	B785	B503	B785	B785	B1131
275	10.83	B385	B385	B385	B385	B385	B385	B785	B503	B785	B785	B1131
300	11.81	B385	B385	B385	B385	B385	B385	B503	B503	B785	B785	B785

A

(For simply supported spans use a continous span 25 per cent greater) T = 230 N. per sq. mm. P = 7 N. per sq.mm. Cover = 15mm.

BANKING HALLS, CHURCHES, CLASSROOMS, KITCHEN, LAUNDRIES

Safe imposed load 3.0 kN. Per sq. m. + 1.0 kN. Per sq. m. finishes

SPANS IN METRES

SLAB THICKNESS		2.0 (6.56)	2.5 (8.20)	3.0 (9.84)	3.5 (11.48)	4.0 (13.12)	4.5 (14.76)	5.0 (16.40)	5.5 (18.04)	6.0 (19.69)	6.5 (21.33)	7.0 (22.97)
mm.	in.											
100	3.94	B196	B283	B385								
125	4.92	B196	B196	B283	B385							
150	5.90	B196	B196	B283	B385	B503	B785					
175	6.89	B283	B283	B283	B283	B285	B503	B385	B785			
200	7.87	B283	B283	B283	B283	B283	B503	B385	B785	B1131		
225	8.86	B283	B283	B283	B283	B283	B385	B503	B785	B785	B1131	B1131
250	9.84	B385	B385	B385	B385	B385	B385	B503	B785	B785	B1131	B1131
275	10.83	B385	B385	B385	B385	B385	B385	B503	B785	B785	B785	B1131
300	11.81	B385	B385	B385	B385	B385	B385	B503	B503	B785	B785	B1131

A

(For simply supported spans use a continous span 25 per cent greater) T = 230 N. per sq. mm. P = 7 N. per sq.mm. Cover = 15mm.

SHOPS, ASSEMBLY HALLS (FIXED SEATING) EXHIBITION GALLERIES

Safe imposed load 4.0 kN. Per sq. m. + 1.0 kN. Per sq. m. finishes

SPANS IN METRES

SLAB THICKNESS		2.0 (6.56)	2.5 (8.20)	3.0 (9.84)	3.5 (11.48)	4.0 (13.12)	4.5 (14.76)	5.0 (16.40)	5.5 (18.04)	6.0 (19.69)	6.5 (21.33)	7.0 (22.97)
mm.	in.											
100	3.94	B196	B283	B503								
125	4.92	B196	B283	B385	B503							
150	5.90	B196	B196	B283	B385	B503	B785					
175	6.89	B283	B283	B283	B385	B503	B785	B785	B1131			
200	7.87	B283	B283	B283	B283	B385	B503	B785	B785	B1131		
225	8.86	B283	B283	B283	B283	B385	B503	B785	B785	B1131	B1131	B1131
250	9.84	B385	B385	B385	B385	B385	B503	B785	B785	B785	B1131	B1131
275	10.83	B385	B385	B385	B385	B385	B385	B503	B785	B785	B1131	B1131
300	11.81	B385	B385	B385	B385	B385	B385	B503	B785	B785	B1131	B1131

A

(For simply supported spans use a continous span 25 per cent greater) T = 230 N. per sq. mm. P = 7 N. per sq.mm. Cover = 15mm.

GARAGES, WORKSHOPS,ASSEMBLY AREAS WITHOUT FIXED SEATING,FILING ROOMS

Safe imposed load 5.0 kN. Per sq. m. + 1.0 kN. Per sq. m. finishes

SPANS IN METRES

SLAB THICKNESS		2.0 (6.56)	2.5 (8.20)	3.0 (9.84)	3.5 (11.48)	4.0 (13.12)	4.5 (14.76)	5.0 (16.40)	5.5 (18.04)	6.0 (19.69)	6.5 (21.33)	7.0 (22.97)
mm.	in.											
100	3.94	B196	B385	B503								
125	4.92	B196	B283	B385	B785							
150	5.90	B196	B283	B385	B503	B785	B785					
175	6.89	B283	B283	B283	B385	B503	B785	B1131	B1131			
200	7.87	B283	B283	B283	B385	B503	B785	B785	B1131	B1131		
225	8.86	B283	B283	B283	B385	B385	B503	B785	B785	B1131	B1131	
250	9.84	B385	B385	B385	B385	B385	B503	B785	B785	B1131	B1131	
275	10.83	B385	B385	B385	B385	B385	B503	B785	B785	B785	B1131	B1131
300	11.81	B385	B385	B385	B385	B385	B503	B503	B785	B785	B1131	B1131

A

(For simply supported spans use a continous span 25 per cent greater) T = 230 N. per sq. mm. P = 7 N. per sq.mm. Cover = 15mm.

FACTORIES, MOTOR ROOMS, BROADCASTING STUDIOS, STAGES

Safe imposed load 7.5 kN. Per sq. m. + 1.0 kN. Per sq. m. finishes

SPANS IN METRES

SLAB THICKNESS		2.0 (6.56)	2.5 (8.20)	3.0 (9.84)	3.5 (11.48)	4.0 (13.12)	4.5 (14.76)	5.0 (16.40)	5.5 (18.04)	6.0 (19.69)	6.5 (21.33)	7.0 (22.97)
mm.	in.											
100	3.94	B283	B503	B785								
125	4.92	B283	B385	B503	B785							
150	5.90	B196	B283	B503	B785	B785	B1131					
175	6.89	B283	B283	B385	B503	B785	B1131	B1131				
200	7.87	B283	B283	B385	B503	B785	B785	B1131				
225	8.86	B283	B283	B283	B385	B503	B785	B785	B1131			
250	9.84	B385	B385	B385	B385	B503	B785	B785	B1131	B1131		
275	10.83	B385	B385	B385	B385	B503	B785	B785	B1131	B1131		
300	11.81	B385	B385	B385	B385	B385	B503	B785	B785	B1131	B1131	

A

(For simply supported spans use a continous span 25 per cent greater) T = 230 N. per sq. mm. P = 7 N. per sq.mm. Cover = 15mm.

FACTORIES, WAREHOUSES

Safe imposed load 10.0 kN. Per sq. m. + 1.0 kN. Per sq. m. finishes

SPANS IN METRES

SLAB THICKNESS		2.0 (6.56)	2.5 (8.20)	3.0 (9.84)	3.5 (11.48)	4.0 (13.12)	4.5 (14.76)	5.0 (16.40)	5.5 (18.04)	6.0 (19.69)	6.5 (21.33)	7.0 (22.97)
mm.	in.											
100	3.94	B385	B785									
125	4.92	B283	B503	B785	B503							
150	5.90	B283	B385	B503	B385	B1131						
175	6.89	B283	B283	B503	B385	B1131	B1131					
200	7.87	B283	B283	B385	B283	B785	B1131					
225	8.86	B283	B283	B385	B283	B785	B785	B1131				
250	9.84	B385	B385	B385	B385	B785	B785	B1131	B1131			
275	10.83	B385	B385	B385	B385	B503	B785	B1131	B1131			
300	11.81	B385	B385	B385	B385	B503	B785	B785	B1131	B1131		

A

B MOMENTS OF RESISTANCE OF SLABS REINFORCED WITH WELDED WIRE MESH IN NEWTON METRES PER METRE WIDTH BY LOAD FACTOR METHOD OF DESIGN

T = 230 Newtons per sq. mm. P = 7.0 Newtons per sq. mm. 15.0 mm. Cover

WELDED MESH REFERENCE NUMBERS

SLAB THICKNESS		B196	B283	B385	B503	B785	B1131
mm.	in.						
100	3.94	3501	4883	6376	7936	10951	
125	4.92	4628	6510	8590	10829	15465	
150	5.90	5755	8137	10804	13721	19978	26306
175	6.89		9765	13017	16613	24492	32809
200	7.87		11392	15231	19505	29006	39313
225	8.86		13019	17445	22398	33520	45816
250	9.84			19659	25290	38033	52319
275	10.83			21872	28182	42547	58822
300	11.81			24086	31074	47061	65326

B MOMENTS OF RESISTANCE OF SLABS REINFORCED WITH WELDED WIRE MESH IN NEWTON METRES PER METRE WIDTH BY LOAD FACTOR METHOD OF DESIGN

T = 230 Newtons per sq. mm. P = 8.5 Newtons per sq. mm. 15.0 mm. Cover

WELDED MESH REFERENCE NUMBERS

SLAB THICKNESS		B196	B283	B385	B503	B785	B1131
mm.	in.						
100	3.94	3539	4963	6524	8189	11567	
125	4.92	4666	6590	8738	11082	16081	21082
150	5.90	5793	8218	10952	13974	20595	27586
175	6.89		9845	13166	16866	25108	34089
200	7.87		11472	15379	19758	29622	40592
225	8.86		13099	17593	22651	34136	47095
250	9.84			19807	25543	38650	53599
275	10.83			22021	29435	43163	60102
300	11.81			31327	31327	47677	66605

SPECIAL REINFORCING WELDED MESH

The size given on page five are standard and are the ones most commonly required.

We can however, readily manufacture Welded Mesh to other specifications, both in the size of wires and spacing.

AIM INDUSTRIES

info@aimindustries.com.pk www.aimindustries.com.pk

LF-36/A, Landhi Industrial Area, Scheme-3, Main Landhi-Korangi Road Karachi.